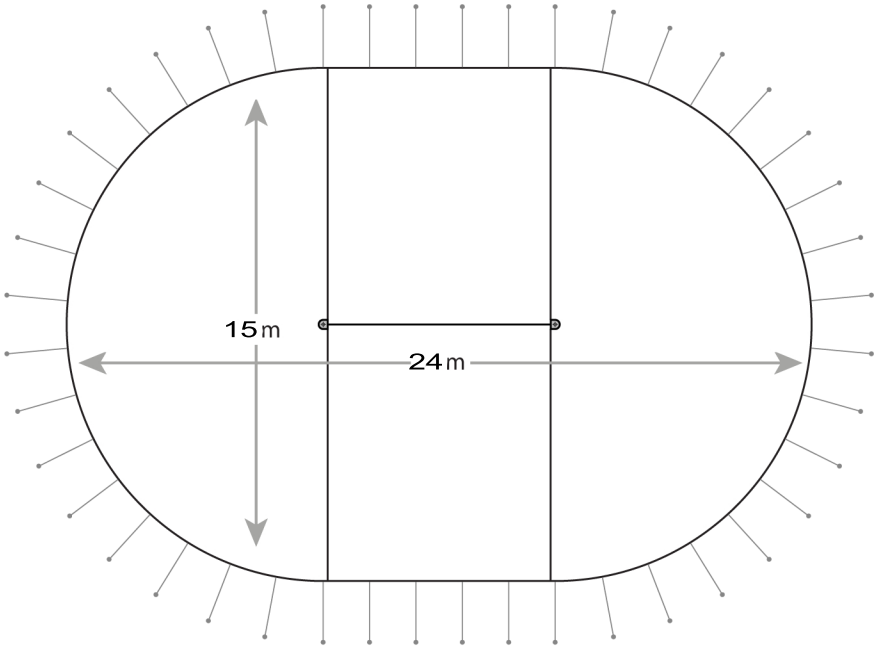

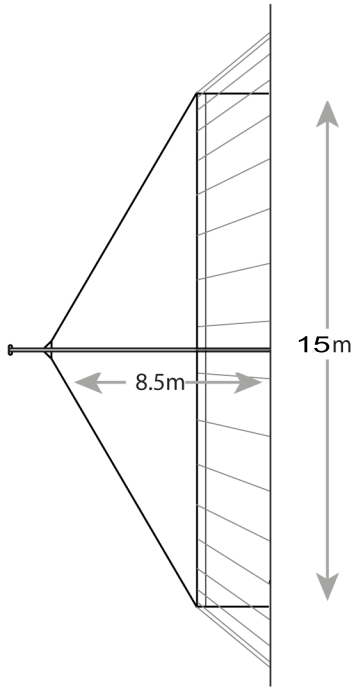

Albion Woods
SHOW TENTS
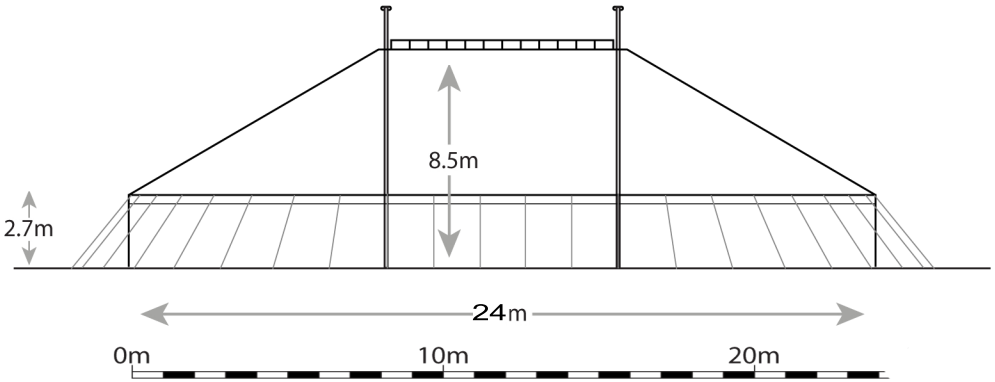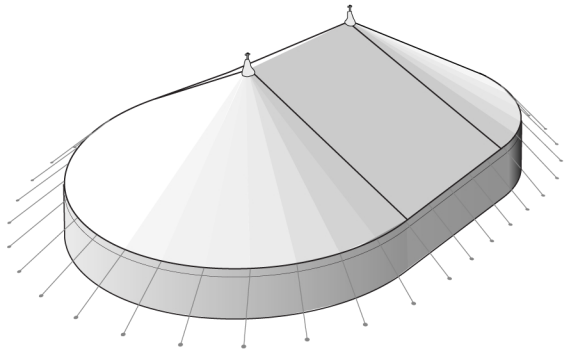
Clearview®
15x24
Two King Poles
2.7m Sidewalls
Ground area = 310m2
Capacity = 600